FAIRCHILD MODEL 2000
PNEUMATIC VOLUME BOOSTER
Installation, Operation and Maintenance Instructions

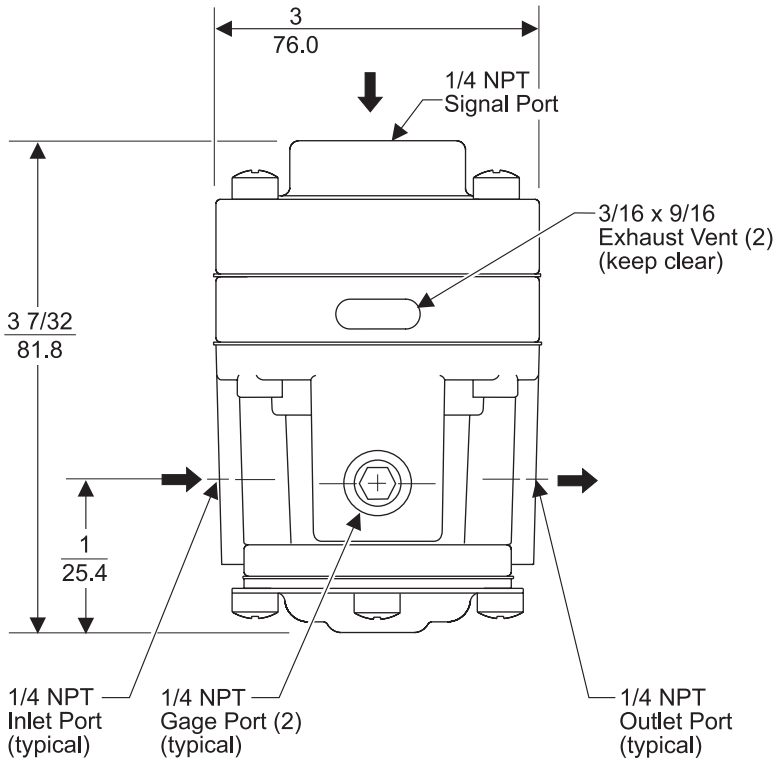

Figure 1. Model 2000 Outline Dimensions

INSTALLATION

Clean all pipelines to remove dirt and scale before installation.

Apply a minimum amount of pipe compound to the male threads of the fitting only. **Do Not use teflon tape as a sealant.** Start with the third thread back and work away from the end of the fitting to avoid contaminating the booster. Install the booster in the air line.

The Inlet and Outlet ports are labeled “In” and “Out”. Tighten all connections securely. Avoid undersized fittings that will limit the flow through the booster. For more information, see Figure 1.

NOTE: Oil free air must be applied to the booster. Use a filter to remove dirt and entrained liquid in the air line ahead of the booster. If an air line lubricator is used, it MUST be located downstream of the booster to avoid interference with performance.

OPERATION

The Model 2000 reproduces a pneumatic signal in a 1:1 ratio or in multiplying or dividing ratios. (Po = Ps x R); where Po is output pressure, Ps is signal pressure, and R is ratio. For more information, see Figure 1.

To clean the Model 2000, use the following steps:

1. Shut off system pressure to the booster to prevent air from escaping. It is not necessary to remove the booster from the air line.

2. Remove the four screws from the bottom of the unit. For more information, see Figure 2.

3. Remove the two screws from the bottom of the Valve Assembly. For more information, see Figure 2.

4. Remove the Valve Assembly. For more information, see Figure 2.

5. Wash the Valve Assembly with a solvent. Exercise care to prevent damage to diaphragms and valve facings. **Avoid solvents such as acetone, carbon tetrachloride and trichlorethylene.**

6. Replace the assembly carefully. Ensure that the Exhaust Vents in the Spacer Ring are clear. For more information, see Figure 2.

Troubleshooting

Problem	Source	Solution
Leakage	Bonnet Screws	Tighten the Bonnet Screws.
High Bleed	• Relief Valve • Supply Valve • Supply Seat	• If contaminated, clean the source and Body.
	• Diaphragm Assembly	• If damaged, install the service kit.

NOTE: If the standard maintenance procedure does not correct the problem, install the appropriate service kit.

Standard	Ratio
• **12154**	• **1:1**
• **12154-1**	• **1:1.6**

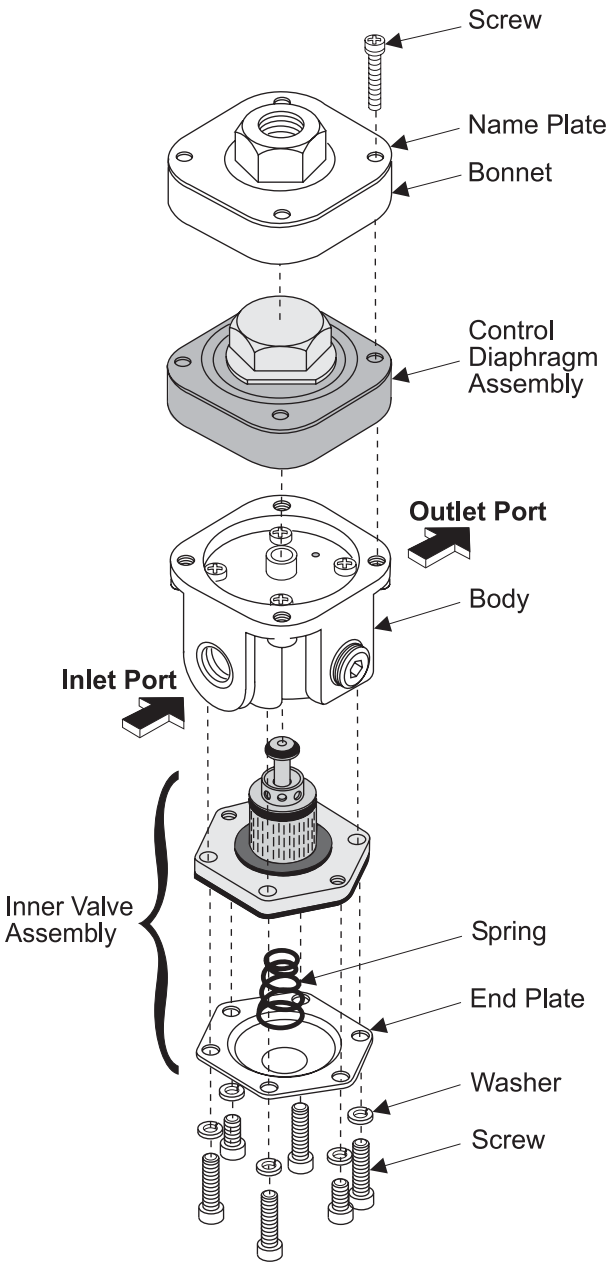

Figure 2. Model 2000 Exploded Drawing

P.S.I. Supplies Pty Ltd.

Installation and Maintenance Instructions for:

Fairchild Model 2000 Pneumatic Volume Booster

For further advice or assistance please contact:

www.psisupplies.com.au
Ph: +61 3 9899 6444
Email: sales@psisupplies.com.au