FAIRCHILD MODEL 30
MIDGET PRECISION REGULATOR
Installation, Operation and Maintenance Instructions

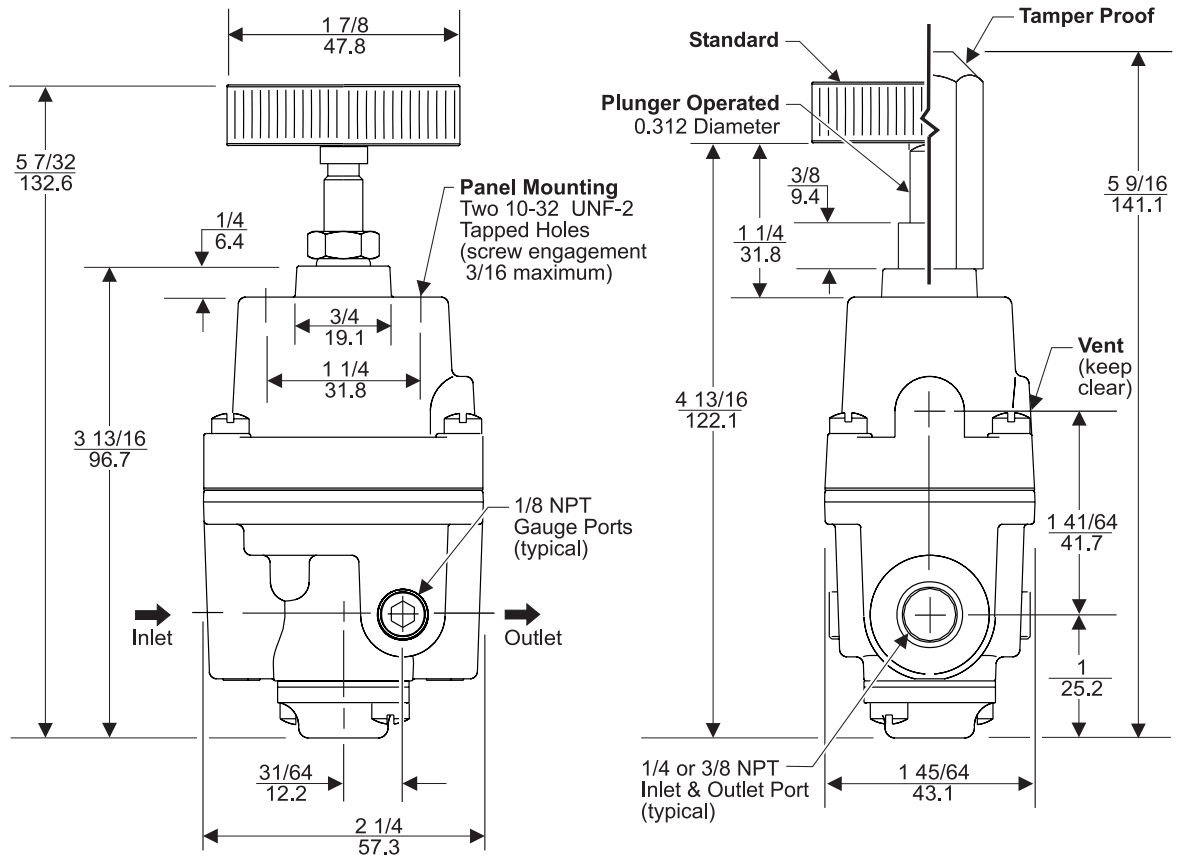

Figure 1. Model 30 Outline Dimensions

INSTALLATION

Use the two 10/32 UNF-2 tapped holes in the bonnet to panel mount the Model 30 regulator. For more information, see Figure 1.

Clean all pipelines to remove dirt and scale before installation.

Apply a minimum amount of pipe compound to the male threads of the fitting only. **Do Not use teflon tape as a sealant.** Start with the third thread back and work away from the end of the fitting to avoid the possibility of contaminating the regulator. Install the regulator in the air line.

The inlet and outlet ports are labeled on the bottom of the regulator with the arrows pointing in the direction of the flow. Tighten connections securely. Avoid undersized fittings that limit the flow through the regulator. For more information, see Figure 1.

NOTE: **Oil free air must be applied to the regulator. Use a filter to remove dirt and entrained liquid in the air line ahead of the regulator. If an air line lubricator is used, it MUST be located downstream of the regulator, to avoid interference with regulator performance**.

LEGAL NOTICE:
The information set forth in the foregoing Installation, Operation and Maintenance Instructions shall not be modified or amended in any respect without prior written consent of Fairchild Industrial Products Company. In addition, the information set forth herein shall be furnished with each product sold incorporating Fairchild's unit as a component thereof.

To clean the Model 30, use the following procedure:

1. Shut off system pressure to the regulator to pre vent air from escaping. It is not necessary to remove the regulator from the air line.
2. Remove the two Screws, Retainer Cap, and Retainer Plate from the bottom of the unit.
3. Remove the Inner Valve Assembly. For more information, see Figure 2.
4. Wash the Inner Valve Assembly with a solvent. Exercise care to prevent damage to diaphragms and valve facings. **Avoid solvents such as acetone, carbon tetrachloride, and trichlorethylene.**
5. Replace the assembly carefully. For more information, see Figure 2.

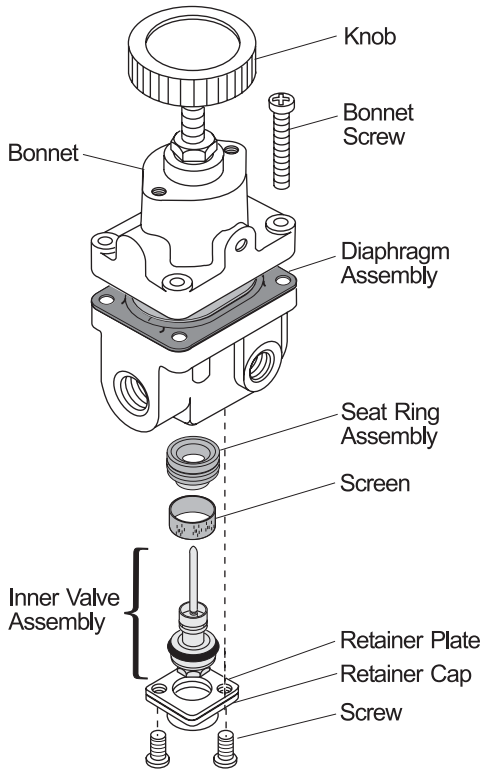

Figure 2. Model 30 Exploded Drawing

Troubleshooting

Table 1. Troubleshooting

Problem	Source	Solution
Leakage	Bonnet Screws	Tighten the Bonnet Screws
High Bleed	• Seat Ring • Inner Valve • Diaphragm Assembly	• If contaminated, clean the source and Body. • If damaged, install the service kit.

NOTE: Standard maintenance procedure does not correct the problem, install the appropriate service kit.

Hazardous Locations	
Hazardous Locations	Group II, Category 2, Gas and Dusts: Zones 1, 2 and 21, 22, respectively Gas Groups IIA and IIB
Ambient Temperature Range	Use must be evaluated for the relevant flammable gas temperature code
Cleaning	Clean with damp cloth
Grounding	Units must be grounded to earth ground
Codes of Practice	PD CLC/TR 50404:2003 BS 5958

Standard	Non-relieving	Low Bleed	Low Flow	Pressure Ranges
• 16116-1 Nitrile	• 16116-2 Nitrile	• 16116-3 Nitrile	• 16116-4 Nitrile	• 2 psig
• 16116-5 Silicone	• 16116-6 Silicone	• 16116-7 Silicone	• 16116-8 Silicone	• 2 psig
• 16116-9 Viton	• 16116-10 Viton	• 16116-11 Viton	• 16116-12 Viton	• 2 psig
• 16116-13 Nitrile	• 16116-14 Nitrile	• 16116-15 Nitrile	• 16116-16 Nitrile	• 10, 30, 60, & 100 psig
• 16116-17 Silicone	• 16116-18 Silicone	• 16116-19 Silicone	• 16116-20 Silicone	• 10, 30, 60, & 100 psig
• 16116-21 Viton	• 16116-22 Viton	• 16116-23 Viton	• 16116-24 Viton	• 10, 30, 60, & 100 psig

P.S.I. Supplies Pty Ltd.

Installation and Maintenance Instructions for:

Fairchild Model 30BP Back Pressure Regulator

For further advice or assistance please contact:

www.psisupplies.com.au
Ph: +61 3 9899 6444
Email: sales@psisupplies.com.au